ABB i-bus® KNX Analogue Input AE/A 2.1

© ABB STOTZ-KONTAKT GmbH -
2CDC 504 067 N0201, page 1

Analogue Input

AE/A 2.1

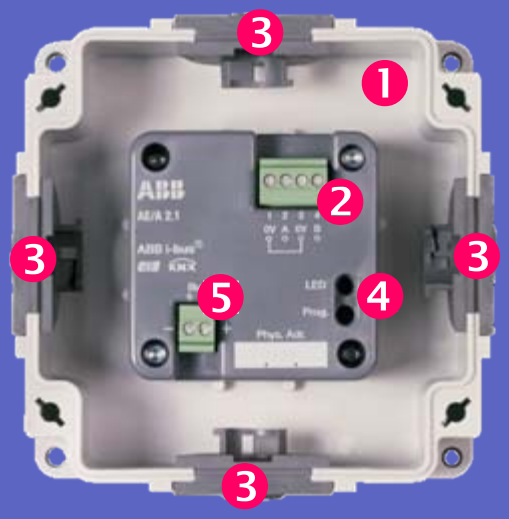

Product Overview

Analogue Input, 2fold, SM

1. Box
2. Sensor connections
3. 4 cable entries
4. Programming button/LED
5. Bus connection terminal

© ABB STOTZ-KONTAKT GmbH - 2CDC 504 067 N0201, page 2

Technique

- Registration and processing of 2 different analogue input signals
- Connection of any sensor with
  0-1 V, 0-5 V, 0-10 V, 1-10 V, 0-20 mA, 4-20 mA,
  0-1000 Ohm,
  PT 100/PT 1000 in 2-wire technology,
  selection of KT and KTY with user defined value input and potential free contact
- Power supply via bus
- Active sensors require an external power supply

© ABB STOTZ-KONTAKT GmbH - 2CDC 504 067 N0201, page 3

Accuracy / Resolution

- Power

Sensor signal	0-1 V	0-5 V	0-10 V	1-10 V
Resolution	200 µV			
Accuracy at +25 °C*	+/- 0.2 %			
Accuracy at 0…+50 °C*	+/- 0.5 %			
Accuracy at -20…+70 °C*	+/- 0.8 %			

*from measured value

© ABB STOTZ-KONTAKT GmbH - 2CDC 504 067 N0201, page 4

Accuracy / Resolution

- Current

Sensor signal	0-20 mA	4-20 mA
Resolution	2 µA	
Accuracy at +25 °C*	+/- 0.2 %	
Accuracy at 0…+50 °C*	+/- 0.5 %	
Accuracy -20…+70 °C*	+/- 0.8 %	

*from measured value

© ABB STOTZ-KONTAKT GmbH - 2CDC 504 067 N0201, page 5

Accuracy / Resolution

- Resistor

Sensor signal	0-1000 Ohm	PT100*	PT1000*
Resolution	0.1 Ohm	0.01 Ohm	0.1 Ohm
Accuracy at +25 °C*	+/- 1.0 Ohm	+/- 0.15 Ohm	+/- 1.5 Ohm
Accuracy at 0…+50 °C*	+/- 1.5 Ohm	+/- 0.20 Ohm	+/- 2.0 Ohm
Accuracy at -20…+70 °C*	+/- 2.0 Ohm	+/- 0.25 Ohm	+/- 2.5 Ohm
		0.1 Ohm = 0.25 °C	1 Ohm = 0.25 °C

*plus cable- and sensor fault

© ABB STOTZ-KONTAKT GmbH - 2CDC 504 067 N0201, page 6

Accuracy / Resolution

- KT/KTY-Resistor

Sensor signal	KT/KTY 1000*	KT/KTY 2000*
Resolution	1 Ohm	1 Ohm
Accuracy at +25 °C*	+/- 2.5 Ohm	+/- 5.0 Ohm
Accuracy at 0…+50 °C*	+/- 3.0 Ohm	+/- 6.0 Ohm
Accuracy -20…+70 °C*	+/- 3.5 Ohm	+/- 7.0 Ohm
	1 Ohm = 0.125 °C / at 25 °C	1 Ohm = 0.064 °C / at 25 °C

*plus cable- and sensor fault

© ABB STOTZ-KONTAKT GmbH - 2CDC 504 067 N0201, page 7

Application program

- Measured value visible as
  1-bit [0/1], 1-byte [0...+255], [-128...+127],
  2-byte [0...+65,535], [-32,768...+32,767],
  2-byte [floating point],
  4-byte [IEEE-floating point]
- Filtering within 1, 4, 16 or 64 measurements
- Threshold value:
  2 each inputs with upper and lower limit / threshold value modified via the bus

© ABB STOTZ-KONTAKT GmbH - 2CDC 504 067 N0201, page 8

Application program

- Comparator / arithmetic / arithmetic mean value
- Minimum duration underflow and over range adjustable
- Offset temperature +/- 5 °C
- Line fault compensation at temperature-resistance via cable length or via cable resistance

© ABB STOTZ-KONTAKT GmbH - 2CDC 504 067 N0201, page 9

Dimension Diagram

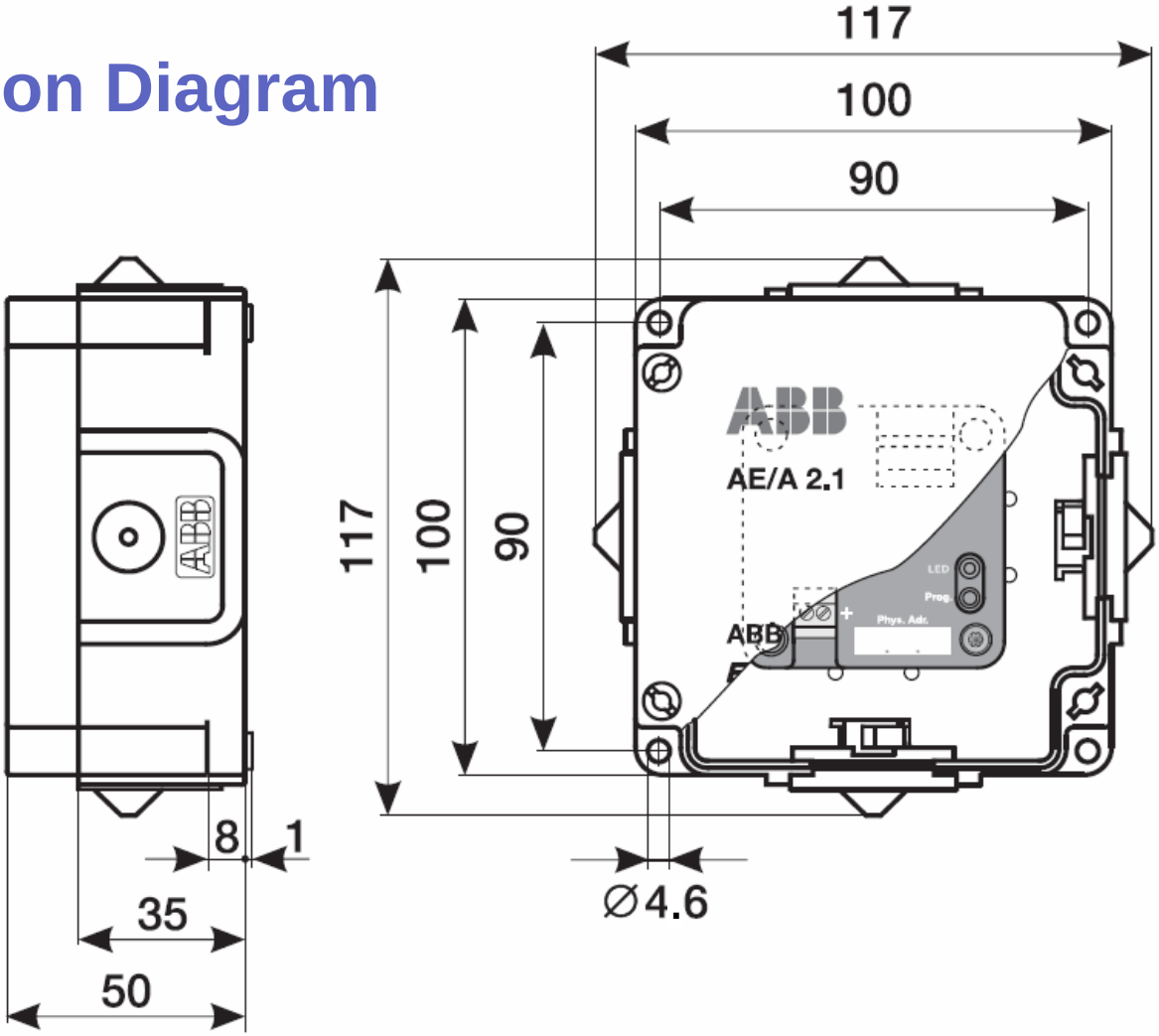

© ABB STOTZ-KONTAKT GmbH - 2CDC 504 067 N0201, page 10

Analogue Input

AE/A 2.1

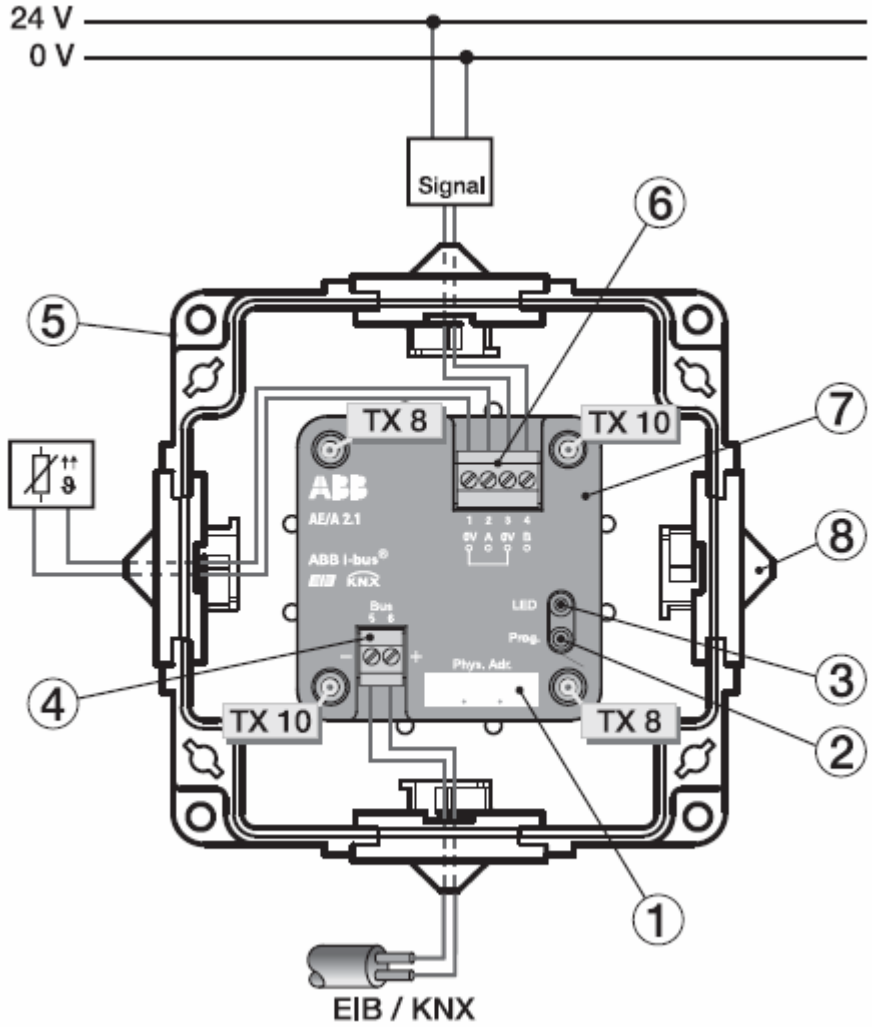

Connection Diagram

① Labelling field

② Programming button

③ Programming LED

④ Bus connection

⑤ Housing

⑥ Sensor connections

⑦ Cover

⑧ Cable entries (4x)

Example: Input A: Temperature sensor

Input B: Externally supplied sensor

© ABB STOTZ-KONTAKT GmbH - 2CDC 504 067 N0201, page 11

Application

- **In commercial projects**
  - Air quality, air flow, air speed
  - Pressure
  - Monitoring of flow rate
  - Temperature, humidity
  - …

© ABB STOTZ-KONTAKT GmbH - 2CDC 504 067 N0201, page 12

Applications

- **In industrial projects**
  - Detection of analogue signals locally, e.g. liquid levels
  - Monitoring of pipe systems concerning
    - Heat flow
  - Temperature control
    - Overheating in cable trunks
  - …

© ABB STOTZ-KONTAKT GmbH - 2CDC 504 067 N0201, page 13

Power and productivity
for a better world™